SI-2600
SI-2600L
7” Disc Grinder

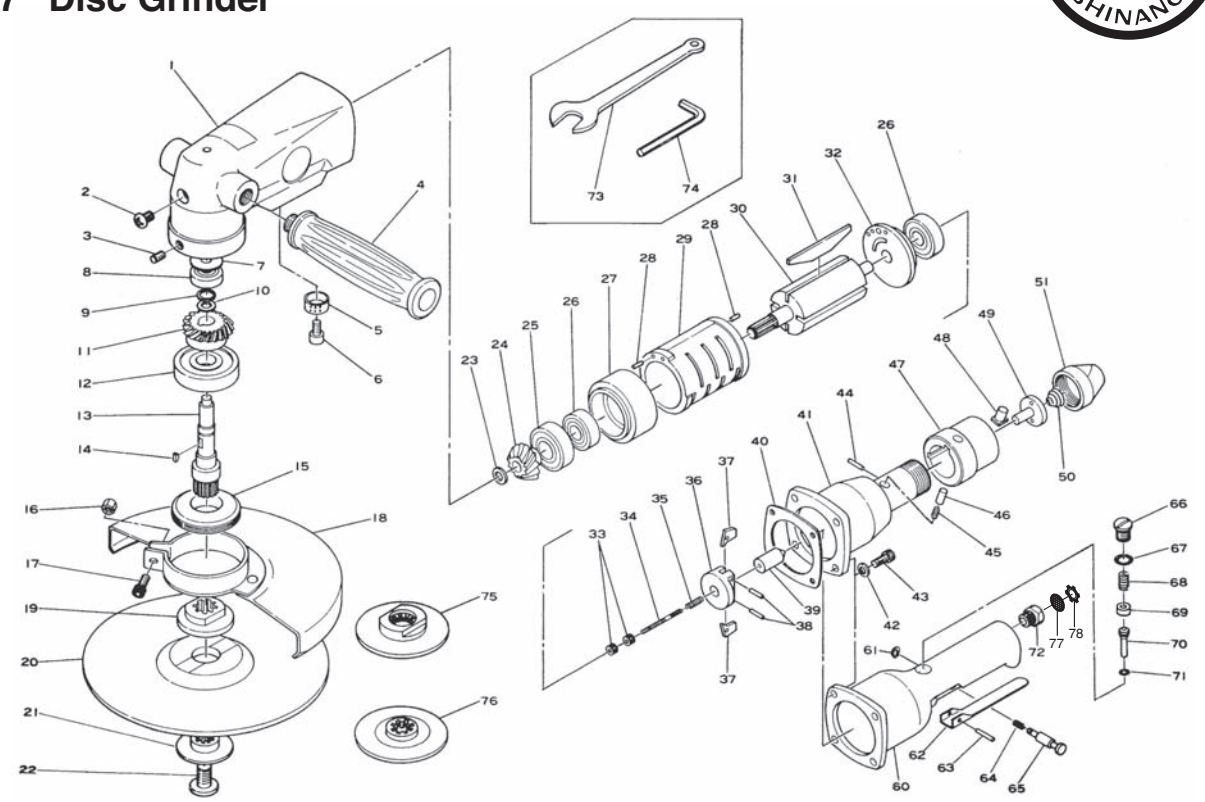

Ref. No.	Parts No.	Description	Q'ty	Ref. No.	Parts No.	Description	Q'ty
1	280-1	Motor Housing	1	36	280-29	Governor	1
2	F-M60-80	Screw	1	37	280-30	Pendulum	6
3	R-M40-40	Set Screw	1	38	30-15	Roll Pin (3-15mm)	2
4	510-50	Handle	1	39	280-31	Plunger	1
5	280-59	Deflector	1	40	280-26	Gasket	1
6	Z-M50-100	Cap Screw	1	41	280-17	Governor Case	1
7	280-10	Spacer	1	42	HSW-50	Washer	4
8	629	Ball Bearing	1	43	Z-M50-200	Cap Screw	4
9	JS-15	Retaining Ring	1	44	940-19	Valve Pin	1
10	WW-150	Wave Washer	1	45	350-7	Valve Spring	1
11	390-50	Bevel Gear	1	46	280-18	Lock Pin	1
12	6303-ZZ	Ball Bearing	1	47	280-20	Throttle Ring	1
13	280-3	Spindle	1	48	280-44	Throttle Button	1
14	280-9	Key	1	49	280-46	Throttle Valve	1
15	390-12	Spindle Cap	1	50	380-33	Conical Spring	1
16	N1-M60	Nut	1	51	280-21	Inlet Bushing	1
17	Z-M60-250	Cap Screw	1	★ 60	280-65D	Valve Housing incl. Valve Bush (280-67)	1
18	280E-1	Disc Cover	1	★ 61	JS-5	Retaining Ring	1
19	280-4	Disc Receiver	1	★ 62	280-72C	Throttle Lever	1
20	280-28	7” Disc	1	★ 63	40-28	Roll Pin (4-28mm)	1
21	280-5	Disc Nut	1	★ 64	280-64	Lock Spring	1
22	280-6	Cap Screw	1	★ 65	280-70	Lock Pin	1
23	JS-9	Retaining Ring	1	★ 66	230-68	Valve Screw	1
24	280-8	Pinion Gear	1	★ 67	P-10	O-Ring	1
25	6202	Ball Bearing	1	★ 68	230-4	Valve Spring	1
26	6201-ZZ	Ball Bearing	2	★ 69	280-66A	O-Ring Retainer	1
27	280-13	Front Plate	1	★ 70	280-66	Valve Stem	1
28	30-8	Roll Pin (3-8mm)	2	★ 71	P-6	O-Ring	1
29	390-10	Cylinder	1	★ 72	280C-4	Inlet Bushing	1
30	280-12	Rotor	1	73	650-24	Spanner Wrench (7/8”)	1
31	390-8	Rotor Blade	4	74	WRA-8	8mm Allen Wrench	1
32	390-4	Rear Plate	1	75	280-73	Disc Receiver (Optional)	
33	N1-M30	Nut	2	76	280-74	Disc Nut (Optional)	
34	280-32	Adjust Screw	1	77	967-19	Screen	1
35	280-33	Governor Spring	1	78	CRTW-16	Retainer	1

★ for SI-2600L

Printed in Japan
Oct. 2011